FluidControl

Off-Line Filter BNF

In hydraulic systems oil transfers power and motion, and in drives it's a vital lubricant. Both as a power transfer medium and as a lubricant, oil is heated by friction losses during operation and changes its viscosity depending on the temperature. At the same time it is subjected to mechanical strain due to the tribological processes in the systems and takes on wear particles this causes. If these particles aren't removed as quickly as possible, they will cause further abrasion and wear.

Hydraulic and lubrication systems therefore increasingly use bypass filters. The advantage of these circuits is that they create stable and therefore more predictable operating conditions for both the filtration and cooling.

The BNF series has compact gerotor pump/filter combinations with different capacities, including custom.

The filter housings are suitable for DIN 24550 filter elements.

- Compact, space-saving design
- DIN filter elements
- Very easy to install
- Easy replacement of filter element
- Low-noise gerotor pump

Introduction and description

Why off-line aggregates?

Depending on the system configuration there are operating conditions (variable capacity pumps, back-flow peaks, etc.), which significantly limit the effectiveness of full flow filtration or even render it completely ineffective.

In addition, quite practical considerations such as installing a cooler with is required anyway or the option of system-independent operation may argue for an off-line aggregate.

Why Bühler?

When we developed the BNF series, we incorporated our years of experience in designing and selling water coolers and filters. Special attention was paid to a compact design. By using standard filter elements in this respect we are not bound to a specific filter supplier.

Together with a well-known manufacturer, Bühler implemented these findings in a comprehensive product line customised for the requirements in fluid control.

Use the data in this leaflet to determine a suitable cooler for your application. If our standard range of products does not includes the right system for your application, we will gladly develop a custom solution for you.

BNF 18/30

In a filter station it's important to offer a compact design with ample capacity to quickly and permanently clean any given amount of oil.

This aspect has been implemented in to a special degree in the BNF series. A low-noise gerotor pump resistant to dirt is integrated into the very compact baseplate. The drive motor and filter housing are arranged vertically and parallel. The suction and pressure line are positioned so they can be routed straight down into the reservoir. This minimises the installation work.

Since the baseplate is further equipped with front connections, the aggregate can be cased next to the reservoir, if so desired.

The aggregate has a built-in pressure limiting valve. DIN elements with NG 250 are used as filter elements.

BNF 60/90

A compact, space-saving design was also realised in this series. Motor, pump and filter housing are combined into one unit and mounted to a frame for side mounting.

The DIN filter element with NG 400 removes to the top for changing.

Planning information

Installation site requirements

Ensure adequate ventilation.

The aggregates are mounted in the installation site using four screws

Electrical connection

The electrical connection must be made by an appropriately trained electrician! Observe the voltage and mains frequency! Fusing must comply with applicable standards! Please note the direction of rotation of the motor when connecting.

Hydraulic connection

Full utilisation of the high capacity of the aggregates requires care when configuring the intake line. This is a very important factor with use in lubricating systems. These are typically filled with higher viscosity oils and must operate reliably in a large temperature range. Although the tremendous increase in viscosity in low temperatures are frequently overlooked. For applications where the parameters are within critical ranges, we recommend calculating the precise expected pressure loss in the suction pipe or using an adequate size (never smaller than the existing pump suction port!).

The suction and pressure pipe must be installed free from tension and vibration. When using hoses, pay particular attention to the appropriate reinforcement on the suction side so the hose cannot collapse due to the negative pressure.

Do not continuously exceed the recommended suction pressure of the pumps. Some situations may require priming the suction pipe prior to first start-up.

Avoid possible leaks in the circuit to prevent environmental damages. If necessary, use e.g. an oil pan.

Technical data

Technical Data	
Pump housing:	Anodised and impregnated cast aluminium
Gerotor:	Sintered steel
Hydraulic screw joint:	Galvanised steel
Operating fluids:	Mineral oils per DIN 51524
Operating oil temperature:	max. 80 °C (higher temperatures on request)
Seal:	Perbunan (NBR) or Viton (FPM) on request
Ambient temperature:	-20 °C to +40 °C

Electric motors		
Voltage/frequency	**BNF 18/30:**	220/380 V - 230/400 V - 240/415 V 50 Hz 460 V 60 Hz Electr. motor per NEMA; UL, CSA, EAC approval
	BNF 60/90:	220/380 - 245/420 V 50 Hz 220/380 - 280/480 V 60 Hz no approval
Thermal stability:	Class of insulation F, utilisation per Class B	
Design:	three-phase asynchronous squirrel-cage induction motor totally enclosed, fan cooled	
Degree of protection:	IP55	
on request:	other voltages higher motor power for higher viscosities UL- or CSA-approved motors higher protection class	

The motors comply with standards
IEC 60034, IEC 60072, IEC 60085

Please also observe the operating manual for the motor! All motors are supplied with cable gland inside the terminal box. The total aggregate height may vary by motor make.

Installation information:

The connection threads are manufactured to ISO 228. The screw-in surfaces are finished and suitable for the use of soft seals. We recommend using screwed plugs per ISO 1179-2.

Please note:

Especially note the dimension of the suction pipe. The cross-sections should not be smaller than specified. In most cases, loud noise indicates the cross-section was reduced too much.

Please refer to the notices in the operating instructions.

Wiring diagrams

Wiring diagram BNF 18/30

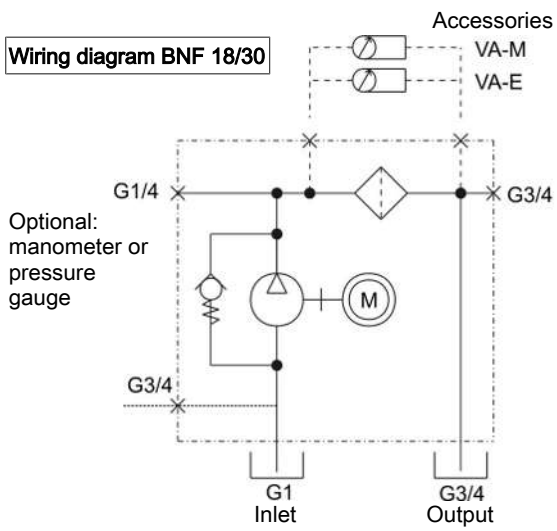

Wiring diagram BNF 60/90

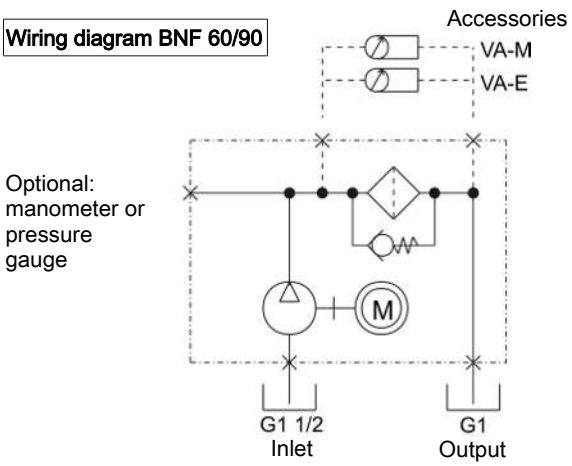

BNF 18 / BNF 30

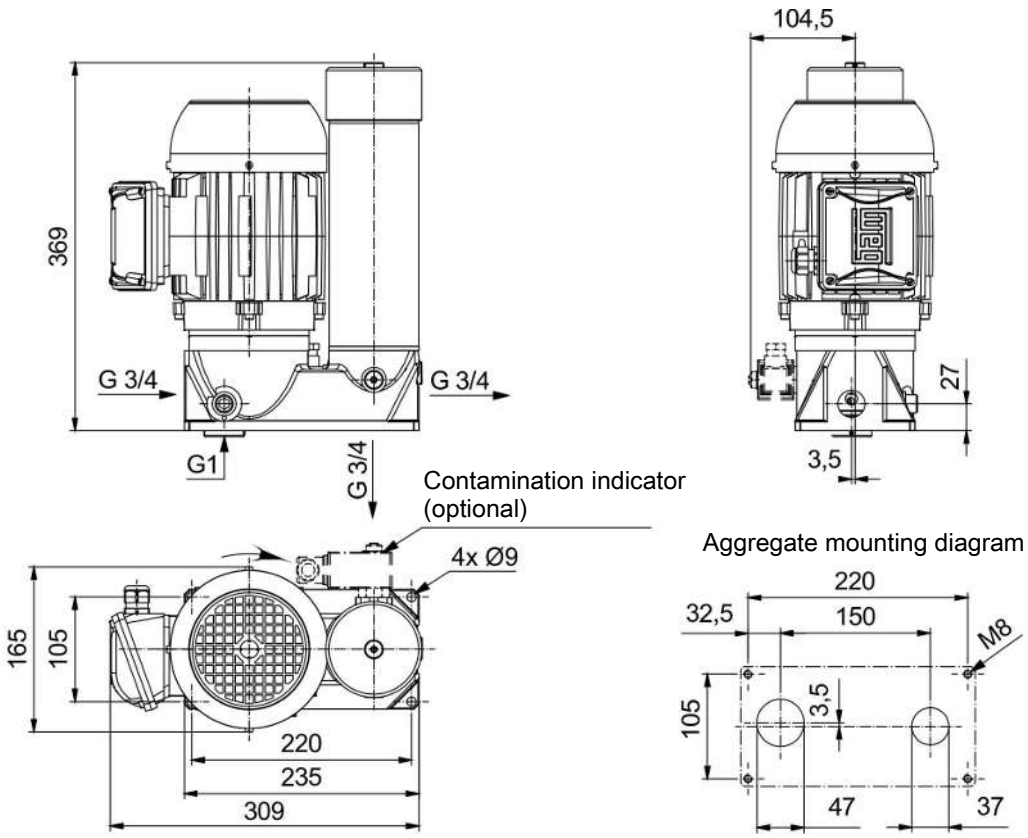

Note: When installing next to the oil reservoir please not the intake!
When determining the bores on the reservoir be sure the contamination indicators remains visible!

Type:	BNF 18-6-0.55*	BNF 30-4-0.75-IE3*
Motor power:	0.55 kW	0.75 kW
Number of pins:	6	4
Power input (400 V 50 Hz):	~ 1.5 A	~ 1.6 A
Suction lift:	2 m	2 m
Filter element pressure limit:	6 bar	6 bar
Display pressure contamination indicator:	2.2 bar	2.2 bar
Suction end connection:	G3/4 / G1	G3/4 / G1
Suction end hose:	DN 20 / DN 25	DN 20 / DN 25
Pressure end connection:	G3/4	G3/4
Pressure end hose:	DN 20	DN 20
Suction pressure:	-0.4 bar	-0.4 bar
For all aggregates briefly:	-0.6 bar	
Flow rate:	18 L/min	28 L/min
Max. feed pressure:	6 bar	6 bar
Weight:	approx. 18 kg	approx. 20 kg

*Electr. motor per NEMA; UL, CSA, EAC approval

BNF 60 / BNF 90

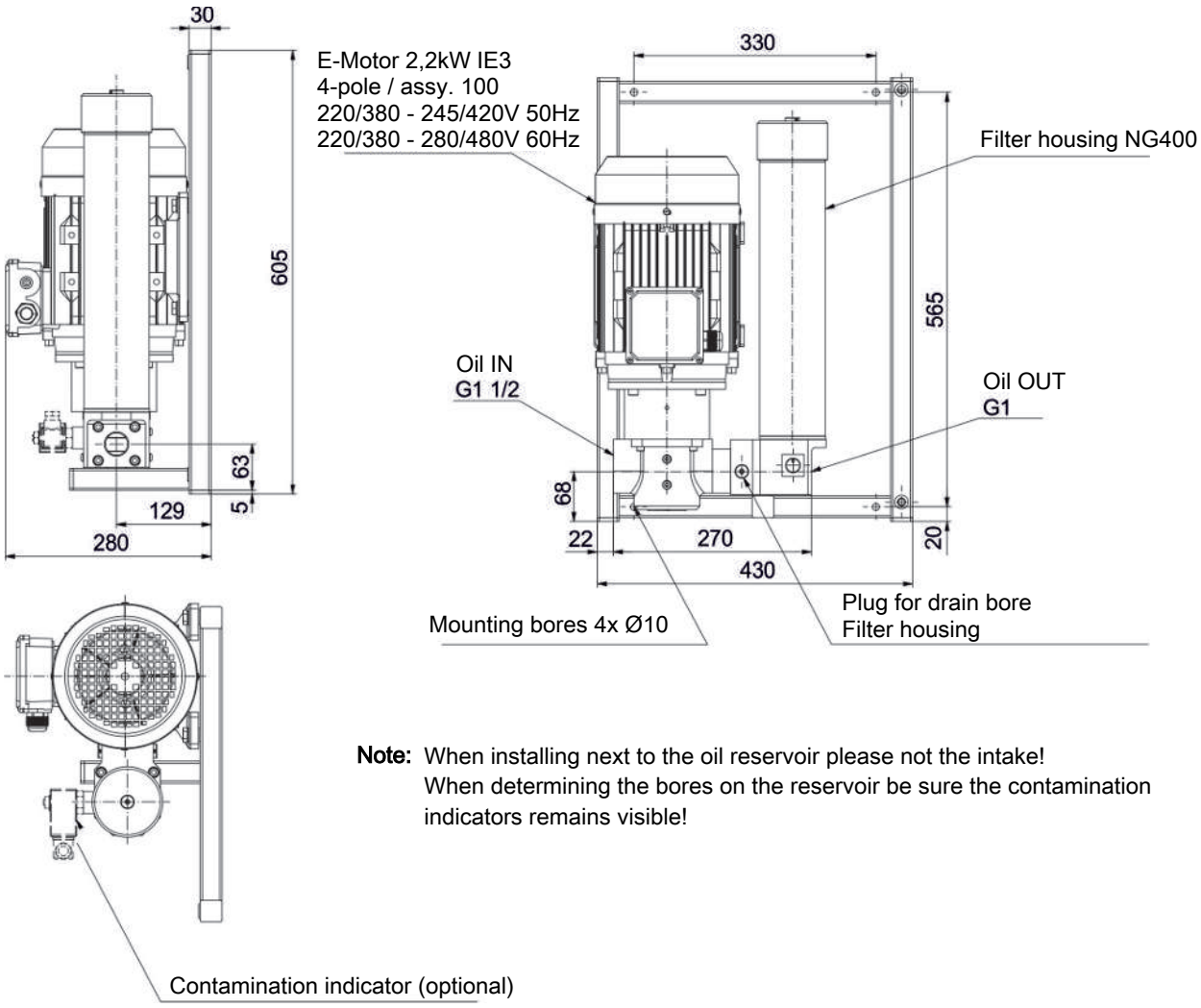

Note: When installing next to the oil reservoir please not the intake!
When determining the bores on the reservoir be sure the contamination indicators remains visible!

Model:	**BNF 60-4-2.2-IE3***	**BNF 90-4-2.2-IE3***
Motor power:	2.2 kW	2.2 kW
Number of poles:	4	4
Power input (400 V 50 Hz):	~ 4.6 A	~ 4.6 A
Suction lift:	2 m	2 m
Filter element pressure limit:	3.5 bar	3.5 bar
Display pressure contamination indicator:	2.2 bar	2.2 bar
Suction end connection:	G1 1/2	G1 1/2
Suction end hose:	DN 40	DN 40
Pressure end connection:	G1 1/4	G1 1/4
Pressure end hose:	DN 32	DN 32
Suction pressure:	-0.4 bar	-0.4 bar
For all aggregates briefly:	-0.6 bar	
Flow rate:	57 L/min	86 L/min
max. oil viscosity:	300 cSt	100 cSt
at max. operating pressure	8 bar	8 bar
Weight:	approx. 34 kg	approx. 35 kg

*Upon request: Electr. motor per NEMA, UL, CSA, EAC approval

Selecting the filter fineness

Determining the contamination class per ISO 4406			System type	Recommend filter retention rate	Recommended element
>4 µm	>6 µm	>14 µm			
13	11	8	Highly reliable control systems susceptible to sludge accumulations; laboratory or aerospace	1-2	Sm-N2
14	12	9	High performance servo systems and high pressure systems with a long life; e.g. aviation, machine tool, etc.	3-5	Sm-x3
16	13	10			Sm-x6
17	15	11	High-quality, reliable systems: general machinery construction	10-12	Sm-x10
20	17	12	General machinery construction and vehicles; moderate pressure, moderate capacity	12-15	Sm-x16
23	19	13	General machinery construction and vehicles; low-pressure systems in heavy machinery construction	15-25	Sm-x25 / Mic 10

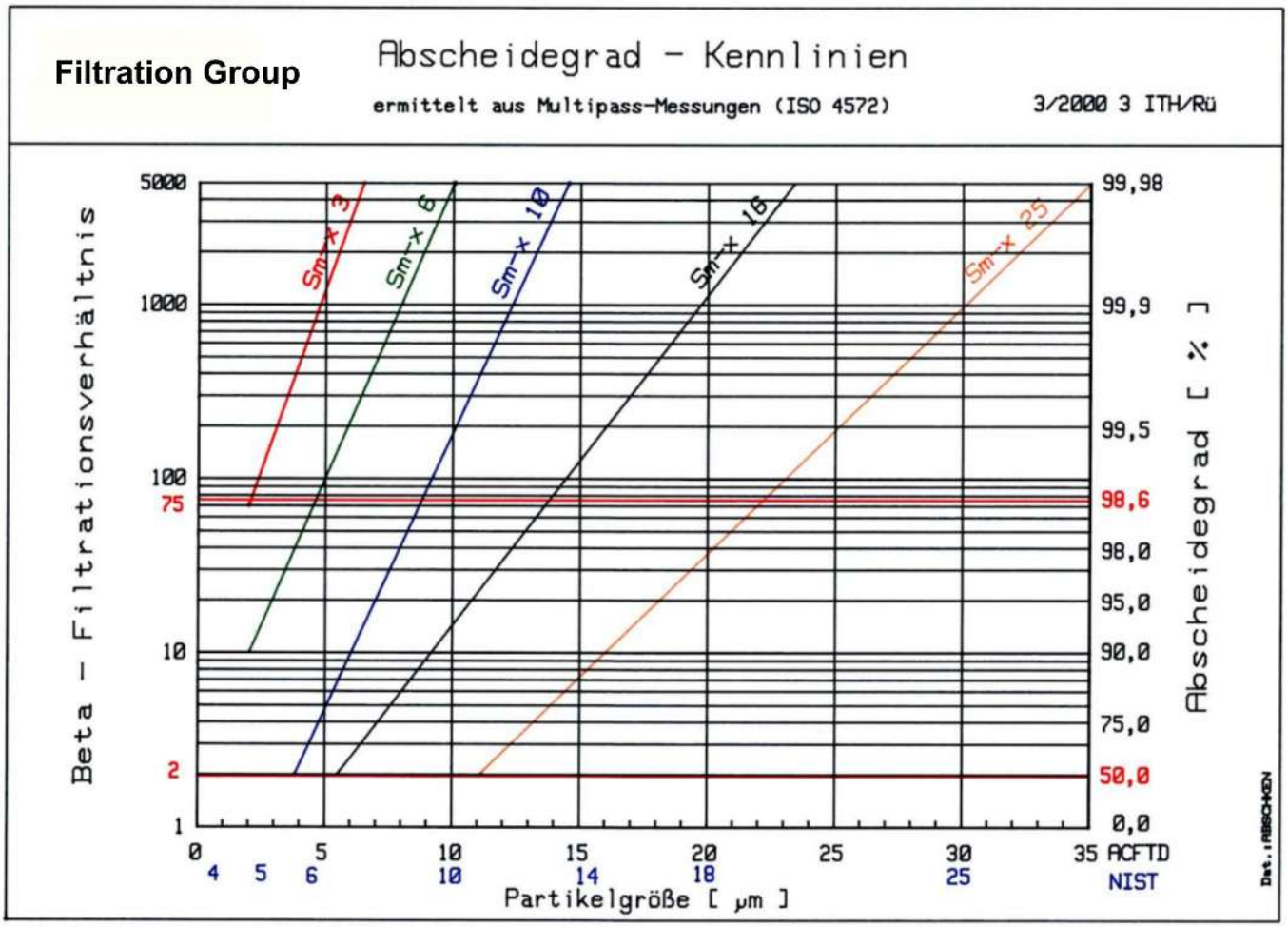

Ordering instructions

Off-line filters

Item no.	Type	Description
3802010	BNF 18	without contamination indicator NBR
3802110	BNF 18	mechanical contamination indicator (optional)
3802210	BNF 18	electric contamination indicator NBR
3803020IE3	BNF 30	without contamination indicator NBR
3803120IE3	BNF 30	mechanical contamination indicator (optional)
3803220IE3	BNF 30	electric contamination indicator NBR
3806030IE3	BNF 60	without contamination indicator NBR
3806130IE3	BNF 60	mechanical contamination indicator (optional)
3806230IE3	BNF 60	electric contamination indicator NBR
3809030IE3	BNF 90	without contamination indicator NBR
3809130IE3	BNF 90	mechanical contamination indicator (optional)
3809230IE3	BNF 90	electric contamination indicator NBR

Filter elements

For type	Item no.	Description
BNF 18 / BNF 30	3825003	N 0250 DN 3
	3825006	N 0250 DN 6
	3825010	N 0250 DN 10
BNF 60 / BNF 90	3840003	N 0400 DN 3
	3840006	N 0400 DN 6
	3840010	N 0400 DN 10

Axis Solutions Pvt Ltd is the Authorized Distributor of Bühler Technologies GmbH in India
www.axisindia.in | info@axisindia.in