Sample Gas Cooler
SGC1

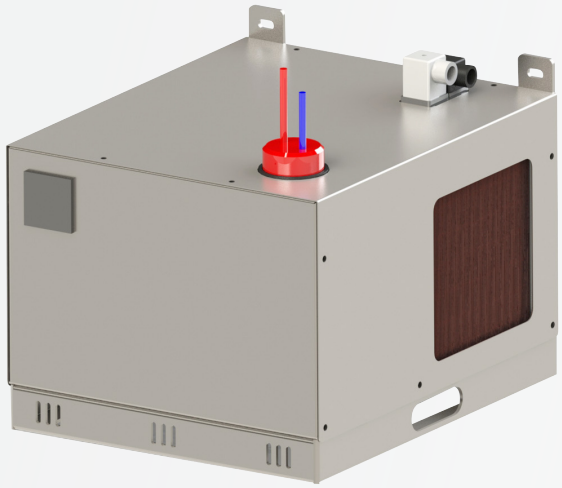

SGC1 (Wall / Base Mount)

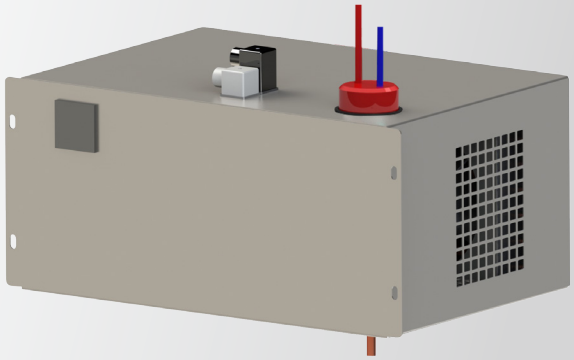

SGC1 (19" Rack Mount)

CE RoHS

FEATURES

- High quality robust design
- Easy Installation
- Suitable for Ambient up to 50°C
- Operating Pressure 1.5 bar
- Cooling Capacity 320 KJ
- Flow Rate 550 LPH
- 19" Rack mount available

ADVANTAGES

- Ease of Maintenance
- Optional Alarm Contacts
- Single & Dual Coil Heat Exchanger
- High Dew Point Stability
- Housing options available
- Mounting options available in same housing

DESCRIPTION

Reliable & Long term operation of an Analyser depends upon efficiency of the Sample conditioning system for which stable dew point of the sample is essential.

Axis Sample Gas Cooler is compressor cooler equipped with efficient heat exchangers to provide stable dew point to the sample there by ensuring security with precise performance of the Analyser.

Cooling performance is ensured by having very tight control of temperature directly (not mechanical control for temp.)

The heat exchangers is either Single Coil or Dual Coil so that two different streams can be catered. Very compact housing design ensures best placement of other components with saving of the cost. Insulation at top of heat exchanger effectively isolates ambient effect.

SGC1 WALL / BASE MOUNT DIMENSION DETAILS

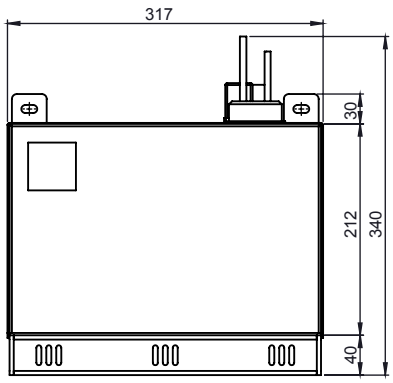

FRONT VIEW

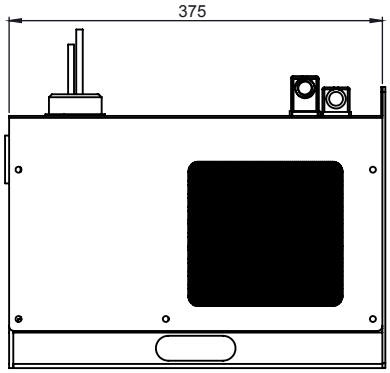

SIDE VIEW

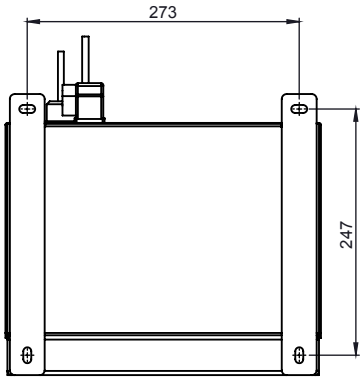

BACK VIEW

All Dimension are in MM

19” RACK MOUNT DIMENSION DETAILS

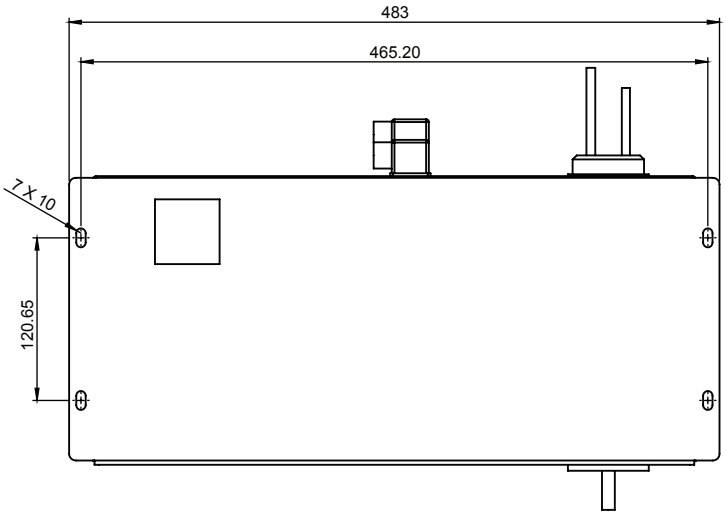

FRONT VIEW

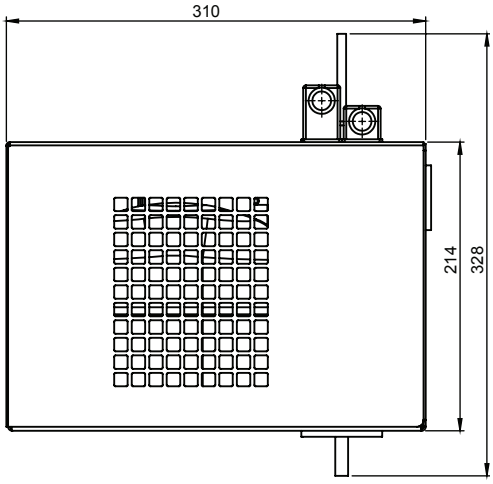

SIDE VIEW

All Dimension are in MM

TECHNICAL SPECIFICATION

General	Type	Refrigeration	
	Mounting	Wall / Base Mounting / 19" Rack mount	
	Dimensions (Wall / Base)	340(H) x 317(W) x 375(D) mm	
	Dimensions (19" Rack Mount)	328(H) x 310(W) x 483(D) mm	
	No. of Sample Coils	One / Two	
	Sample	Gas	
	Weight	Approx. 19Kg	
Material	Housing	MS CRCA or SS 304 (on request)	
	Cooling Coil	Copper	
	Heat Exchange	SS 316	
	Finish	Powder coated RAL 7035 for MS / Buff finish for SS 304	
Connections	Sample Gas Inlet	1/4" Tube	
	Sample Gas Outlet	1/4" Tube	
	Condensate Outlet	3/8" Tube	
Electrical	Power Supply	230 or 115 VAC, 50 Hz	
	Alarm Contact (Optional)	Max. 250 V, 1A (Resistive Load)	
	Power Consumption	Approx. 460VA	
Functionality	Sample Gas Flow	550 LPH (Max.)	
	Sample Outlet Temp.	Approx. 5°C (+/- 1°C)	
	Operating Pressure	1.5 bar for heat exchanger	
	Cooling Capacity	320 kJ	
	Warm Up Time	10-12min. (Max.)	
	Ambient Temperature	+5°C to +50°C	
Heat Exchanger		**SCE**	**DCE**
	Flow Rate (Max.)	550LPH	2 x 225 LPH
	Max. Cooling Capacity	475 kJ/h	475 kJ/h
	Dead Volume	67 ml	30 ml x 2
	Pressure drop	< 0.1 bar	< 0.1 bar

ORDERING INFORMATION

SGC1									
	Power Supply								
	0								115 VAC, 50 Hz
	1								230 VAC, 50 Hz
		Housing Material							
		0							MS CRCA Powder Coated
		1							SS 304
			Heat Exchanger						
			0						Without
			1						SC, Single Coil, SS
			2						DC, Dual Coil, SS
				Alarm Option					
				0					Without
				1					With
					Condensate Discharge (1st Stream)				
					0				Without
					1				Peristaltic Pump
					2				Auto Condensate Drain AK 5.1
					3				Auto Condensate Drain AK 5.2
					4				Auto Condensate Drain AK 20
						Condensate Discharge (2nd Stream)			
						0			Without
						1			Peristaltic Pump
						2			Auto Condensate Drain AK 5.1
						3			Auto Condensate Drain AK 5.2
						4			Auto Condensate Drain AK 20
							Type of Model		
							0		Standard Cooler
							1		CE Certified Cooler
								Type of Mounting	
								0	Wall / Base Mount
								1	19" Rack Mount

SPARE / ACCESSORIES

Description	Part No.	Quantity	Description	Part No.	Quantity
Peristaltic Pump 230VAC	9124030121	1 No.	Solid State Relay	ASPL0684	1 No.
Peristaltic Pump 110VAC	9124030122	1 No.	Cooling Fan – 230VAC, 50Hz	ASPL2790	1 No.
Auto CondensateDrain AK 5.	24510008	1 No.	Compressor 230VAC, 50Hz	ASPL2787	1 No.
Auto CondensateDrain AK 5.	14510006	1 No.	Compressor 115VAC, 50Hz	ASPL2876	1 No.
Auto Condensate Drain AK 20	4510004	1 No.	Tube for peristaltic pump	ASPL3185	1 No.
Condensate Vessel	ASPL1096	1 No.	Power plug & Socket – 230VAC, 50Hz	ASPL0372 & ASPL2802	1 Set
SCE – Single Coil HE	ASPL3101	1 No.	Power plug & socket – 115VAC, 50Hz	ASPL3387 & ASPL2802	1 Set
DCE – Dual Coil HE	ASPL3403	1 No.	Alarm plug & socket	ASPL0348 & ASPL2803	1 Set
Temp.Controller with Alarm	ASPL2520	1 No.			

Important Note: Due to continuous product improvement; specifications may be subject to change without notice.